DO NOT SCALE UNLESS STATED - IF IN DOUBT ASK

Material	
Qty Req'd	

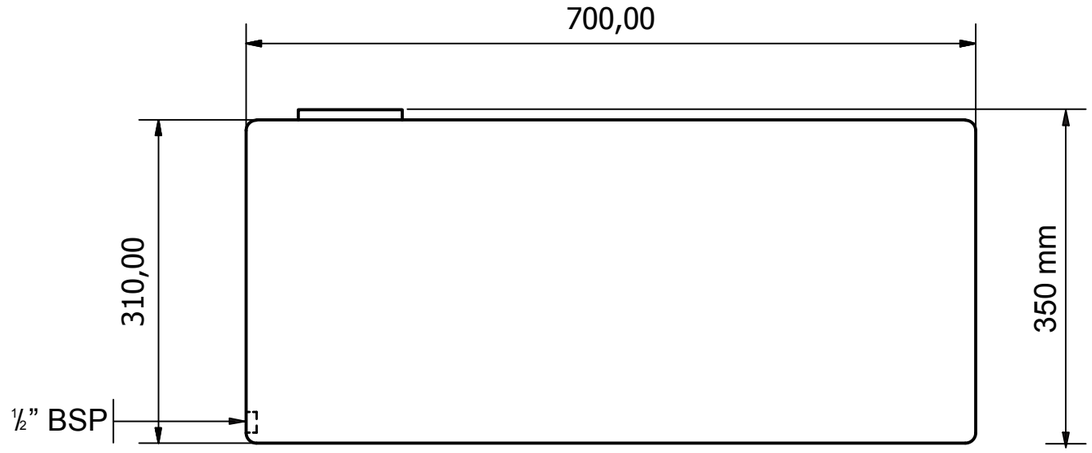

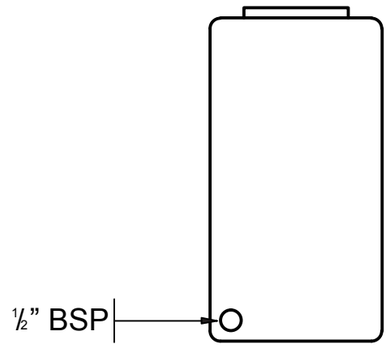

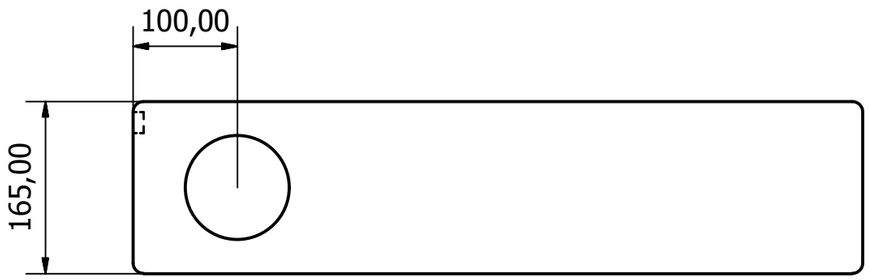

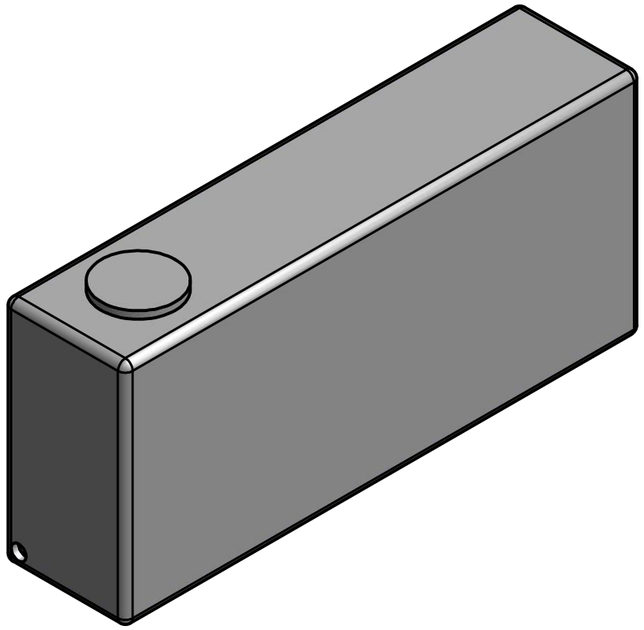

Stock Code	Volume (L)	Lid "	Outlet "
30U-NA-4	30	4	½

TANKS DIREKT

THIS DRAWING AND THE INFORMATION THEREON IS THE SOLE PROPERTY OF TANKS DIREKT AND SHALL NOT BE COPIED OR REPRODUCED WITHOUT THE CONSENT OF TANKS DIREKT.

DIMENSIONS ARE ALL IN MM UNLESS OTHERWISE STATED.
ALL TOLERENCES +/- 1MM UNLESS STATED.

CUSTOMER:			
PROJECT:	30 Litre Upright		
DRAWN DATE: 14/09/2013	DESIGNED BY:	CHECKED BY:	
SHEET 1 OF 1	REV A	DRAWING NO:	

REV	ZONE	DESCRIPTION	DATE