SPIROVENT SOLAR AUTOCLOSE Patent Pending

Deaerator

SPIROTECH

Mounting and operating instruction

For article no's starting with AA….FBA08
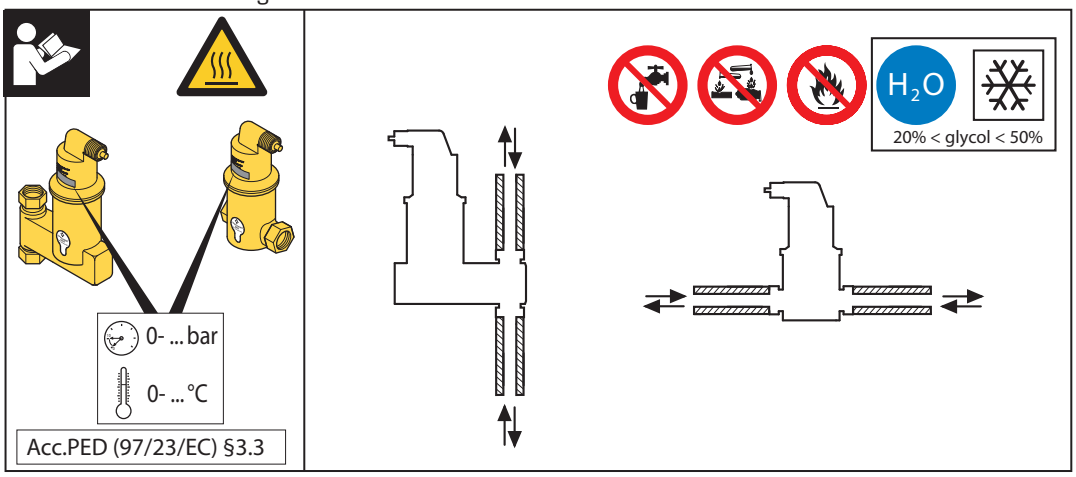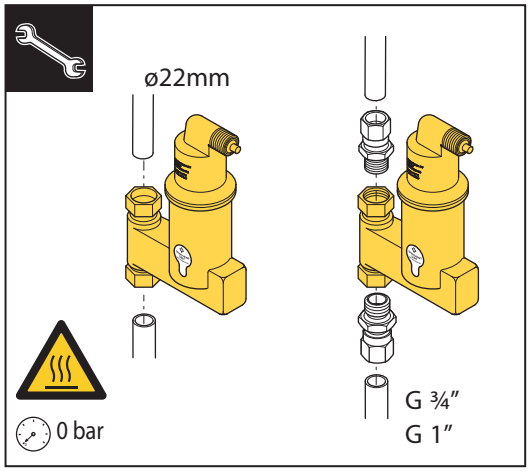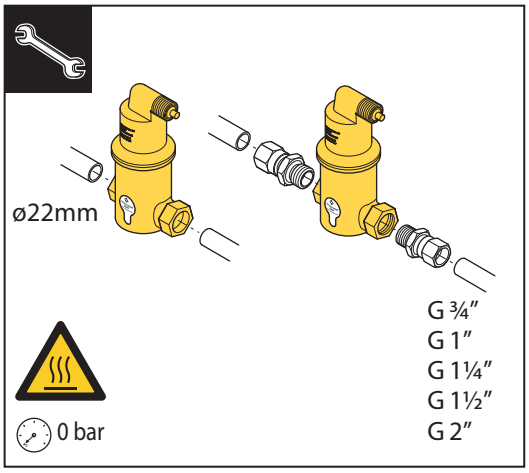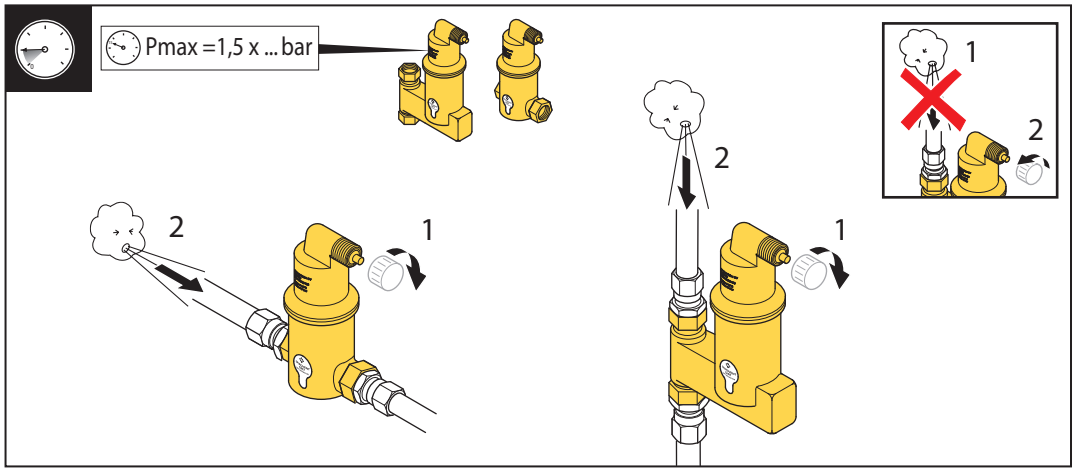
18.158_02